m-tech gmbh
Untere Au 3
D - 74670 Forchtenberg
Fon : +49 (7947) 939-0
Fax : +49 (7947) 939-19

P. O. Box 12 46
D - 74668 Forchtenberg
Internet : www.m-tech-gmbh.com
e-mail : info@m-tech-gmbh.com

MPG 12 HD

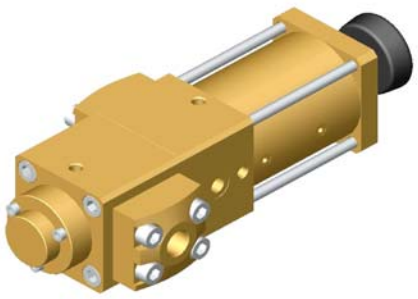

- ► manual valve
- ► function: manually operated
- ► design: pressure balanced
- ► main materials: brass and monel
- ► seat material: PEEK
- ► media: inert gases / rare gases / CO / O_2 / CO_2 / air
  other media on request
- ► approval: BAM
- ► suitable for high pressure oxygen service

technical data

► pressure range	0 - 420 bar	
► connections	BSP 1/4", BSP 1/2", NPT 1/4", NPT 1/2", SW 1/2", SW 3/4"	
► nominal diameter	DN 12	
► actuation	handwheel	
► media temperature	from - 40° C to + 80° C	
► ambient temperature	from - 40° C to + 60° C	
► vacuum leak rate	10^{-6} mbar x l x s^{-1}	
► flow direction	A > B	B > A
► Kv-value	4,81 m^3/ h	4,64 m^3/ h
► length	324 mm	
► width	79 mm	
► weight	10,8 kg (incl. connection flanges)	

alternative valve types of this series

- ► pneumatic version
- ► manual + pneumatic version
  (i. e. pneumatic version with manual override)
- ► proportional version
- ► manual + pneumatic proportional version
  (i. e. pneumatic prop. version with manual override)

options with these valve types

- ► connections made to specification
- ► pressure measuring ports
- ► configuration in stainless steel instead of monel
- ► assembly in compact manifolds
  (possibility to join up to 8 valves on 1 module)

◊ all rights reserved as far as technical alteration without notice is concerned ◊ no responsibility for typographical errors ◊ detailed drawings upon request ◊

technical drawings

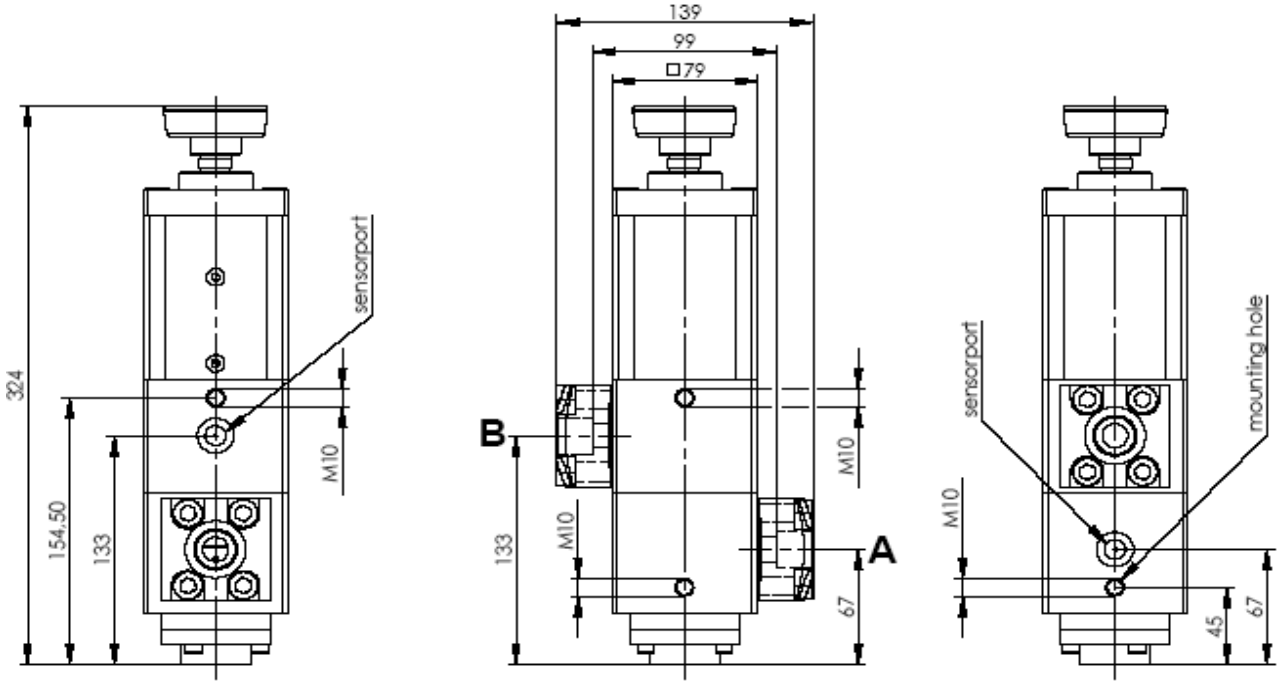

◊ all rights reserved as far as technical alteration without notice is concerned ◊ no responsibility for typographical errors ◊ detailed drawings upon request ◊